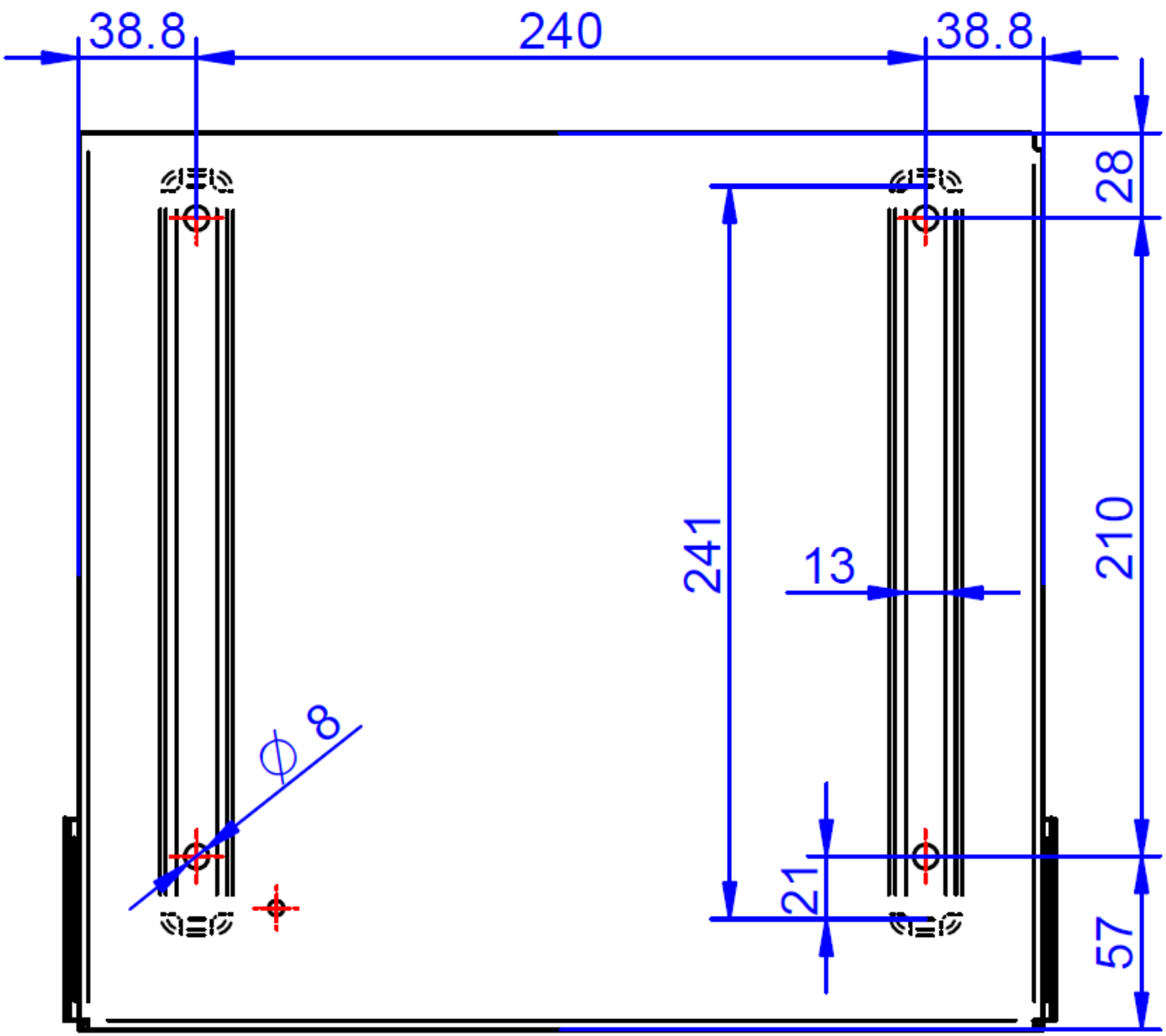
38.8
240
38.8
28
241
13
210
Ø 8
21
57